# JLBIDW1200
## Dishwasher

# Instruction manual

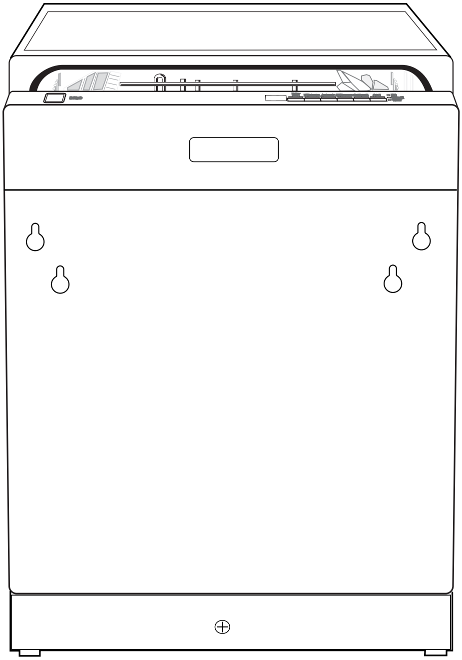

John Lewis

# ⚠ Important safety information

**It is most important that this instruction book should be retained with the appliance for future reference. Should the appliance be sold or transferred to another owner, or should you move house and leave the appliance, always ensure that the book is supplied with the appliance in order that the new owner can get to know the functioning of the appliance and the relevant warnings.**
**These warnings have been provided in the interest of safety. You MUST read them carefully before installing or using the appliance. If you are unsure of the meanings of these warnings contact the John Lewis branch from which you purchased the appliance.**

ℹ In the interest of your safety and to ensure the correct use, before installing and first using the appliance, read this user manual carefully, including its hints and warnings. To avoid unnecessary mistakes and accidents, it is important to ensure that all people using the appliance are thoroughly familiar with its operation and safety features. Save these instructions and make sure that they remain with the appliance if it is moved or sold, so that everyone using it through its life will be properly informed on appliance use and safety. If you are unsure of the meanings of these warnings contact the John Lewis branch from which you purchased the appliance.

## Installation

- This appliance is heavy. Care should be taken when moving it.
- Check your dishwasher for any transport damage. Never connect a damaged machine. If your dishwasher is damaged contact your supplier.
- All packaging must be removed before use.
- Any electrical and plumbing work required to install this appliance must be carried out by a qualified and competent person.
- For safety reasons it is dangerous to alter the specifications or attempt to modify this product in any way.
- Never use the dishwasher if the electrical supply cable and water hoses are damaged; or if the control panel, work top or plinth area are damaged such that the inside of the appliance is freely accessible. Contact your local repair agent, in order to avoid hazard.
- All sides of the dishwasher must never be drilled to prevent damage to hydraulic and electric components.

⚠ For electrical and water connection carefully follow the instructions given in the specific paragraphs.

## Child safety

- This appliance is designed to be operated by adults. Children should not be allowed to tamper with the controls or play with the product.

- Keep all packaging well away from children. There is a risk of suffocation.
- Keep all detergents in a safe place out of children's reach.
- Keep children well away from the dishwasher when the door is open.

## Correct use

- This dishwasher is only intended for washing household utensils suitable for machine washing.
- Do not put any solvents in the dishwasher. This could cause an explosion.
- Knives and other items with sharp points must be loaded in the cutlery basket with their points down or placed in a horizontal position in the upper basket.
- Only use products (detergent, salt and rinse aid) suitable for dishwashers.
- Avoid opening the door whilst the appliance is in operation, hot steam may escape.
- Do not take any dishes out of the dishwasher before the end of the washing cycle.
- After use, isolate the appliance from the power supply and turn off the water supply.
- This product should be serviced only by an authorized service engineer, and only genuine spare parts should be used.
- Under no circumstances should you attempt to repair the machine yourself. Repairs carried out by inexperienced persons could cause injury or serious malfunctioning. Contact your local repair agent. Always insist on genuine spare parts.

## General safety

- Persons (including children) with reduced physical sensory, mental capabilities or lack of experience and knowledge must not use the appliance. They must have supervision or instruction for the operation of the appliance by a person responsible for their safety.
- Dishwasher detergents can cause chemical burns to eyes, mouth and throat. Could endanger life! Comply with the safety instructions of the dishwasher detergent manufacturer.
- The water in your dishwasher is not for drinking. Detergent residue may still be present in your machine.
- Ensure that the door of the dishwasher is always closed when it is not being loaded or unloaded. In this way you will avoid anybody tripping over the open door and hurting themselves.
- Do not sit or stand on the open door.

## Maintenance and cleaning

- For information on maintenance and cleaning your dishwasher see the specific chapter in this instruction manual.

## Service

- This product should be serviced by an authorized service engineer, and only genuine spare parts should be used.

## Ecological hints

To save water and energy and help protect the environment, we recommend that you follow these hints:

- Ensure that the water softener is correctly adjusted.
- Do not prewash under running water.
- Select the wash programme to suit the nature and degree of the soiling on the dishes.

- Do not use more detergent, dishwasher salt and rinse aid than is recommended in these operating instructions and by the manufacturer of the respective product.
- **Delay start:** When possible programme your dishwasher to run over night, to enable, for example, the use of economical overnight electricity tariffs.
- **Automatic Wash Programme:** This machine is fitted with a turbidity sensor which intelligently adjusts the temperature and rinsing cycles during the wash programme, depending on the degree of soiling on the dishes. This helps to reduce energy and water consumption on lightly soiled loads.

## Environmental information

The packaging materials are environmentally friendly and can be recycled. The plastic components are identified by markings, e.g. >PE<, >PS<, etc. Please dispose of the packaging materials in the appropriate container at the community waste disposal facilities.

When a unit is no longer being used:
- Pull the plug out of the socket.
- Cut off the cable and plug and dispose of them.
- Dispose of the door catch. This prevents children from trapping themselves inside and endangering their lives.

The symbol on the product or on its packaging indicates that this product may not be treated as household waste. Instead it should be taken to the appropriate collection point for the recycling of electrical and electronic equipment. By ensuring this product is disposed of correctly, you will help prevent potential negative consequences for the environment and human health, which could otherwise be caused by inappropriate waste handling of this product. For more detailed information about recycling of this product, please contact your local council, your household waste disposal service or the shop where you purchased the product.

# Contents


## For the user

**Important safety information** 2

**Description of the appliance** 6
Optical signal 6

**The control panel** 7
The digital display 7
Function buttons (A, B, C, D and E) 7
Audible signals 8

**Washing programmes** 9

**When the dishwasher is first installed** 10
The water softener 10
Filling with dishwasher salt 12
Filling with rinse aid 12
Adjusting the rinse aid dosage 13

**Daily use** 14
Loading cutlery and dishes 14
The lower basket 15
The cutlery basket 15
The upper basket 16
Adjusting the height of the upper basket 16
Use of detergent 17

**Multi tab function** 19
Activation/deactivation of the rinse aid dispenser 19

**Select and start a washing programme** 20

**Unloading the dishwasher** 21

**Maintenance and cleaning** 22
Cleaning the filters 22
External cleaning 23
Internal cleaning 23

**Something not working** 23

## For the user

**Technical data** 26

**Installation** 26
Unpacking 26
Fixing to the adjacent units 26
Levelling 27

**Water connections** 27
Water inlet connection 27
Water drain connection 27

**Electrical connection** 29

**Repairs - After sales service** 29


## Guide to use the instruction manual

The following symbols will be found in the text to guide you throughout the instructions:

Safety instructions

Hints and tips

Environmental information

# Description of the appliance

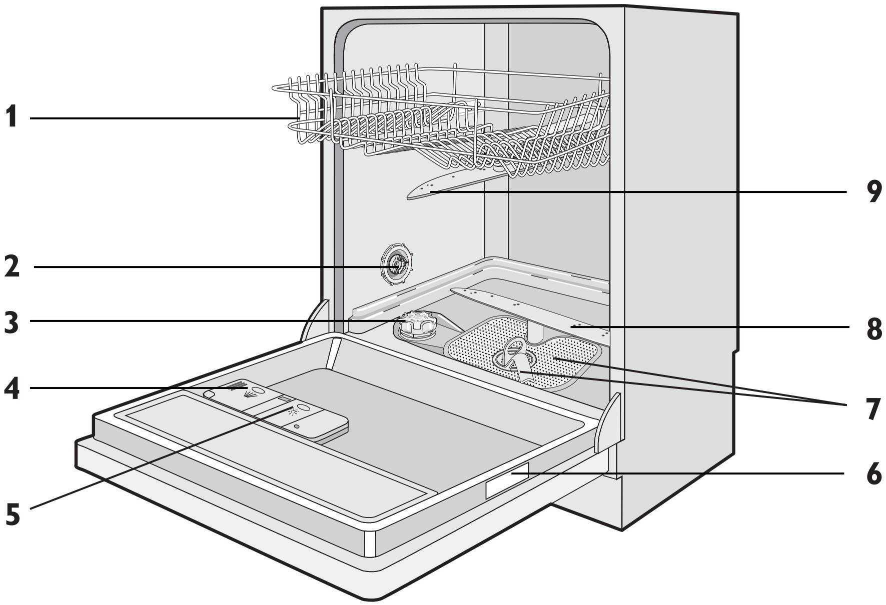


1. Upper basket
2. Water hardness dial
3. Salt container
4. Detergent dispenser
5. Rinse aid dispenser
6. Rating plate
7. Filters
8. Lower spray arm
9. Upper spray arm

## Optical signal

Once the washing programme starts, a point-shaped optical signal shows on the floor beneath the appliance door.

If you install the appliance higher up with a furniture door mounted flush, the optical signal can no longer be seen.

| **Optical signal** | |
|---|---|
| Red light fixed | Indicates the running of a washing programme. Comes on when the programme starts. Goes off once the programme has ended. |
| Red light flashing | Indicates a malfunction of the appliance. |

# The control panel

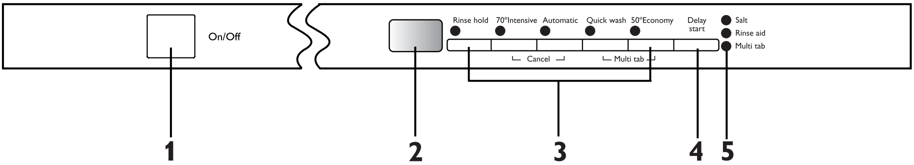


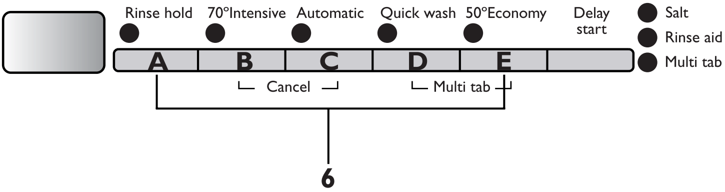


1. On/Off button
2. Digital display
3. Programme selection buttons
4. Delay start button
5. Indicator lights
6. Function buttons

## Indicator lights

In addition to the programme indicator lights that allow you to see which programme is running or has been selected, other indicator lights will help you in the use and maintenance of your dishwasher.

| Indicator lights | |
|---|---|
| **Salt** 1) | Comes on when the special salt has run out. |
| **Rinse aid** 1) | Comes on when the rinse aid has run out. |
| **Multi tab** | Indicates the activation/ deactivation of the Multi tab function (See 'Multi tab function'). |

1) The salt and rinse aid indicator lights are never on while a washing programme is running even if filling with salt and/or rinse aid is necessary.

## The digital display

The digital display indicates:

- The level of hardness to which the water softener is set,
- The approximate remaining time of the running programme,
- Activation/deactivation of the rinse aid dispenser (**ONLY** with Multi tab function active),
- The end of a washing programme (the digital display shows zero),
- The countdown of the delay start,
- Fault codes concerning malfunction of the dishwasher,
- Activation/deactivation of the audible signals.

## Function buttons (A, B, C, D and E)

The following functions can be set using these buttons:

- Setting the water softener level,

- Cancelling a washing programme or a delay start in progress,
- Activation/deactivation of the Multi tab function,
- Activation/deactivation of the rinse aid dispenser when Multi tab function is active,
- Activation/deactivation of the audible signals.

## Setting mode

Press the On/Off button; if **ALL** programme button lights come on the appliance is in setting mode.

Always remember that when performing the following operations:

- Selecting a washing programme,
- Setting the water softener,
- Activating/deactivating the rinse aid dispenser,
- Activating/deactivating the audible signals,

the appliance **MUST** be in setting mode.

Press the On/Off button; if a programme button light comes on the last performed or selected programme is still set.
In this case, to return to setting mode, the programme has to be cancelled.

**To cancel a set programme or a programme in progress**

Simultaneously press and hold the two function buttons **B** and **C** until all the programme button lights come on.
The programme has been cancelled and the appliance is now in setting mode.

## Audible signals

Audible signals have been introduced to help indicate which operations the dishwasher is performing:

– **Setting of the water softener,**
– **End of programme**
– **Intervention of an alarm due to malfunction.**

**Factory setting:** audible signals activated.

It is possible to deactivate the audible signals, using the function buttons on the control panel.

1. Press the On/Off button. The dishwasher must be in setting mode.
2. Simultaneously press and hold function buttons **B** and **C**, until the lights of function buttons **A**, **B** and **C** start flashing.
3. Press function button **C**, the lights of function buttons **A** and **B** go off while the light of function button **C** continues to flash. The digital display shows the current setting.

| | |
|---|---|
| 0b | Audible signals deactivated |
| 1b | Audible signals activated |

4. To change the setting, press again function button **C**. Each time the button is pressed the level changes, the digital display shows the new setting.
5. To memorize the operation, switch off the dishwasher by pressing the On/Off button.

# Washing programmes

| Programme | Degree of soil | Type of load | Programme description | | | | | Consumption values [1] | | |
|---|---|---|---|---|---|---|---|---|---|---|
| | | | Prewash | Main wash [2] | Intermediate rinse | Final rinse | Drying | Duration (in minutes)[3] | Energy (in kWh) | Water (in litres) |
| Rinse hold | Any | Partial load (to be completed later in the day) | | | ● | | | - | 0,1 | 4 |
| 70° Intensive | Heavy soil | Crockery, cutlery, pots and pans | ● | 70 | 2 | ● | ● | - | 1,6 - 1,8 | 22 - 24 |
| Automatic [4] | Any | Crockery, cutlery, pots and pans | ● | 45 - 70 | 1 - 2 | ● | ● | - | 1,1 - 1,7 | 12 - 23 |
| Quick wash[5] | Normal or light soil | Crockery and cutlery | | 60 | | ● | | - | 0,9 | 9 |
| 50° Economy | Normal soil | Crockery and cutlery | ● | 50 | ● | ● | ● | - | 1,0 - 1,1 | 12 - 13 |

1) The consumption values are intended as a guide. They depend on pressure and the temperature of the water, variations of the power supply and the quantity of dishes.
2) Temperature of the main wash in Celsius scale.
3) The digital display shows the programme duration.
4) During the 'Automatic' washing programme the level of soiling on the dishes is determined by how cloudy the water is. The programme duration, water and energy consumption levels can vary. This depends upon whether the appliance is fully or partially loaded and if the dishes are lightly or heavily soiled. The temperature of the water is automatically adjusted between 45°C and 70°C.
5) Ideal for washing a partially loaded dishwasher. This is the perfect daily programme, made to meet the needs of a family of **4 persons** who only wish to load breakfast and dinner crockery and cutlery.

# When the dishwasher is first installed

Before using your dishwasher for the first time:

- Ensure that the electrical and water connections comply with the installation instructions
- Remove all packaging from inside the appliance
- Set the water softener level
- Pour 1 litre of water into the salt container and then fill with dishwasher salt
- Fill the rinse aid dispenser

i If you want to use combi detergent tablets such as "3 in 1", "4 in 1", "5 in 1" etc... set the Multi tab function (see "Multi tab function").

## The water softener

The dishwasher is equipped with a water softener designed to remove minerals and salts from the water supply, which would have a detrimental or adverse effect on the operation of the appliance.
The higher the content of these minerals and salts, the harder your water is. Water hardness is measured in equivalent scales, Clarke degrees, French degrees (°TH) and mmol/l (millimol per litre - international unit for the hardness of water).
The softener should be adjusted according to the hardness of the water in your area. Your local Water Authority can advise you on the hardness of the water in your area.

| Water hardness | | | Adjusting the water hardness setting | | Use of salt |
|---|---|---|---|---|---|
| Clarke | °TH | mmol/l | manually | electronically | |
| 64 - 88 | 91 - 125 | 9,1 - 12,5 | 2 | level 10 | yes |
| 53 - 63 | 76 - 90 | 7,6 - 8,9 | 2 | level 9 | yes |
| 46 - 52 | 65 - 75 | 6,5 - 7,5 | 2 | level 8 | yes |
| 36 - 45 | 51 - 64 | 5,1 - 6,4 | 2 | level 7 | yes |
| 28 - 35 | 40 - 50 | 4,0 - 5,0 | 2 | level 6 | yes |
| 23 - 27 | 33 - 39 | 3,3 - 3,9 | 2 | level 5 | yes |
| 18 - 22 | 26 - 32 | 2,6 - 3,2 | 1 | level 4 | yes |
| 13 - 17 | 19 - 25 | 1,9 - 2,5 | 1 | level 3 | yes |

| Water hardness | | | Adjusting the water hardness setting | | Use of salt |
|---|---|---|---|---|---|
| Clarke | °TH | mmol/l | manually | electronically | |
| 5 - 12 | 7 - 18 | 0,7 - 1,8 | 1 | level 2 | yes |
| < 5 | < 7 | < 0,7 | 1 | level 1 | no |

## Setting the water softener

The water softener must be set in two ways: manually, using the water hardness dial and electronically.

## Setting manually

The dishwasher is factory set at position 2.

1. Open the dishwasher door.
2. Remove the lower basket from the dishwasher.
3. Turn the water hardness dial to position 1 or 2 (see table above).
4. Replace the lower basket.

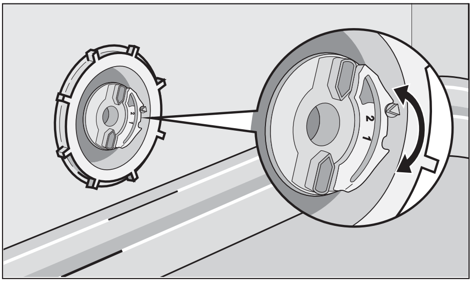


## Setting electronically

The dishwasher is factory set at level 5.

1. Press the On/Off button. The dishwasher must be in setting mode.
2. Simultaneously press and hold function buttons **B** and **C**, until the lights of function buttons **A**, **B** and **C** start flashing.
3. Press function button **A**, the lights of function buttons **B** and **C** go off while the light of function button **A** continues to flash. The digital display shows the current level and a sequence of intermittent audible signals can be heard.
   **Examples:**
   5 L displayed, 5 intermittent audible signals, pause, etc. = level 5
   10 L displayed, 10 intermittent audible signals, pause, etc. = level 10
4. To change the level, press function button **A**. Each time the button is pressed the level changes. (For the selection of the new level see the chart).
   **Examples:**
   If the current level is 5, by pressing function button **A** once, level 6 is selected, if the current level is 10, by pressing function button **A** once, level 1 is selected.
5. To memorize the operation, switch off the dishwasher by pressing the On/Off button.

## Filling with dishwasher salt

**Warning!** Only use salt specifically designed for use in dishwashers. All other types of salt not specifically designed for use in a dishwasher, especially table salt, will damage the water softener. Only fill with salt just before starting one of the complete washing programmes. This will prevent any grains of salt or salty water, which may have been spilt, remaining on the bottom of the machine for any period of time, which may cause corrosion.

**To fill:**

1. Open the door, remove the lower basket and unscrew the cap of the salt container by turning it anticlockwise.
2. Pour 1 litre of water into the container **(this is necessary only before filling with salt for the first time)**.
3. Using the funnel provided, pour in the salt until the container is full.

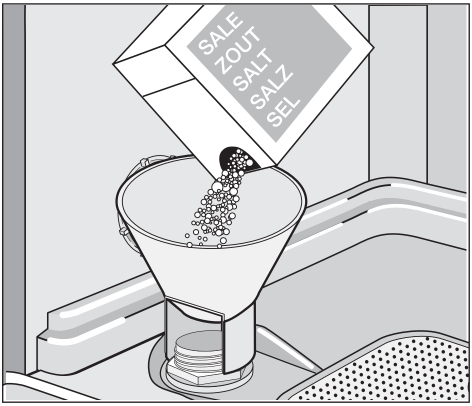


4. Replace the cap making sure that there is no trace of salt on the screw thread or on the gasket.
5. Replace the cap tightly turning it clockwise until it stops with a click.

Do not worry if water overflows from the unit when filling with salt, this is quite normal.

The salt indicator light on the control panel can remain on for a few hours after the salt has been replenished, assuming the dishwasher remains switched on. If you are using salt that takes longer to dissolve then this can take longer. The operation of the machine is not affected.

## Filling with rinse aid

**Warning!** Only use branded rinse aid for dishwashers.
Never fill the rinse aid dispenser with any other substances (e.g. dishwasher cleaning agent, liquid detergent). This would damage the appliance.

Rinse aid ensures thorough rinsing, and spot and streak free drying.
Rinse aid is automatically added during the last rinse.

1. Open the container by pressing the release button (A).

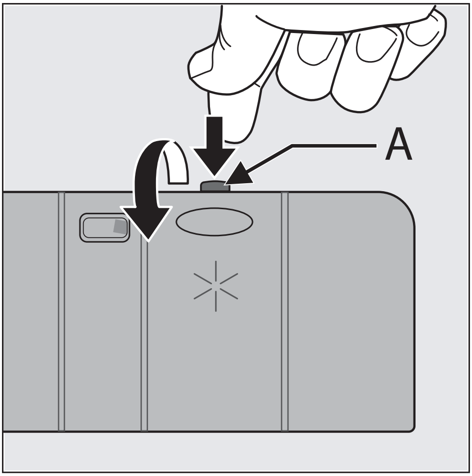


2. Add the rinse aid in the container. The maximum level for filling is indicated by "max".

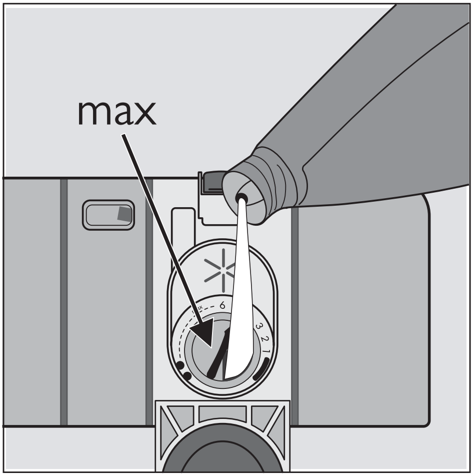


The dispenser holds about 110 ml of rinse aid, which is sufficient for between 16 and 40 dishwashing cycles, depending upon the dosage setting.

3. Ensure that the lid is closed after every refill.

Clean up any rinse aid spilt during filling with an absorbent cloth to avoid excess foaming during the next wash.

## Adjusting the rinse aid dosage

According to the finish and drying results obtained, adjust the dose of rinse aid by means of the 6 position selector (position 1= minimum dosage, position 6= maximum dosage).

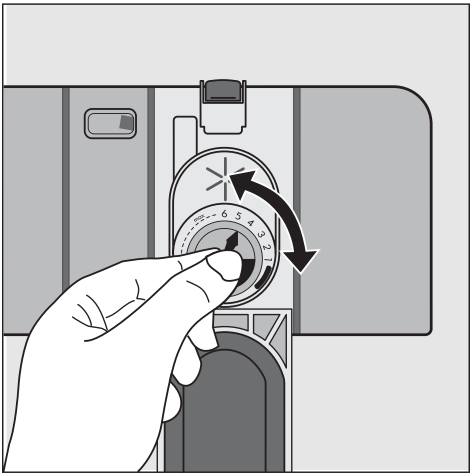

The dose is factory set in position 4. Increase the dose if there are drops of water or lime spots on the dishes after washing. Reduce it if there are sticky whitish streaks on the dishes or a bluish film on glassware or knife blades.

# Daily use

- Check if it's necessary to refill with dishwasher salt or rinse aid.
- Open the door and slide out the baskets to load the dishes.
- Load cutlery and dishes into the dishwasher.
- Fill with dishwasher detergent.
- Select a wash programme suitable for the cutlery and dishes.
- Start the wash programme.

## Loading cutlery and dishes

Sponges, household cloths and any object that can absorb water may not be washed in the dishwasher.

- Before loading the dishes, you should:
  – Remove all left over food and debris.
  – Soften remnants of burnt food in pans
- When loading the dishes and cutlery, please note:
  – Dishes and cutlery must not impede the rotation of the spray arms.
  – Load hollow items such as cups, glasses, pans, etc. with the opening downwards so that water cannot collect in the container or a deep base.
  – Dishes and items of cutlery must not lie inside one another or cover each other.
  – To avoid damage to glasses, they must not touch.
  – Lay small objects in the cutlery basket.
- Plastic items and pans with non stick coatings have a tendency to retain water drops; these items will not dry as well as porcelain and steel items.
- Light items (plastic bowls etc.) must be loaded in the upper basket and arranged so they do not move.

| **For washing in the dishwasher the following cutlery and dishes** | |
|---|---|
| **are not suitable:** | **are of limited suitability:** |
| • Cutlery with wooden, horn, china or mother-of-pearls handles.<br>• Plastic items that are not heat resistant.<br>• Older cutlery with glued parts that are not temperature resistant.<br>• Bonded cutlery items or dishes.<br>• Pewter or copper items.<br>• Lead crystal glass.<br>• Steel items prone to rusting.<br>• Wooden platters.<br>• Items made from synthetics fibres. | • Only wash stoneware in the dishwasher if it is specially marked as being dishwasher-safe by the manufacturer.<br>• Glazed patterns may fade if machine washed frequently.<br>• Silver and aluminium parts have a tendency to discolour during washing: Residues, e.g. egg white, egg yolk and mustard often cause discolouring and staining on silver. Therefore always clean left-overs from silver immediately, if it is not to be washed straight after use. |

# The lower basket

The lower basket is designed to take saucepans, lids, plates, salad bowls, cutlery, etc.
Serving dishes and large lids should be arranged around the edge of the basket, ensuring that the spray arms can turn freely.

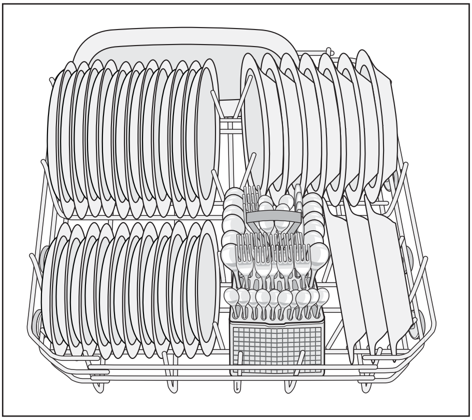

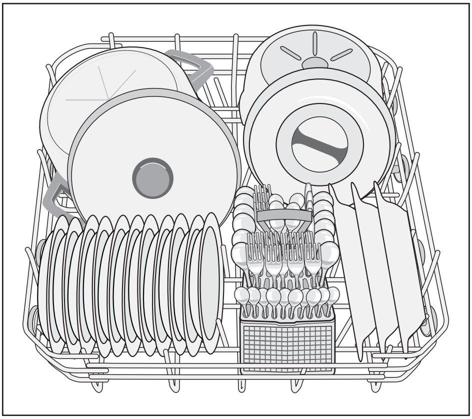

The two rows of prongs in the lower basket can lie flat to allow you to load pots, pans and bowls.

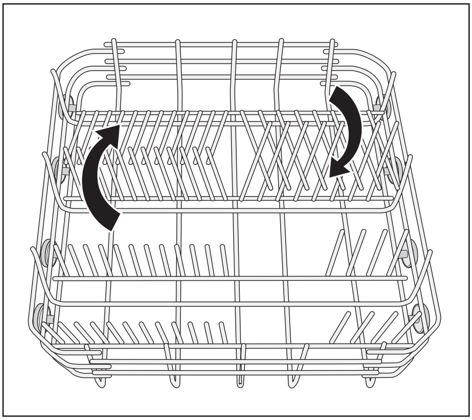

# The cutlery basket

**Warning!** Long bladed knives stored in an upright position are a potential hazard. Long and/or sharp items of cutlery such as carving knives must be positioned horizontally in the upper basket. Take care when loading or unloading sharp items such as knives. Forks and spoons should be placed in the removable cutlery basket with the handles facing downwards and the knives with their handles facing upwards

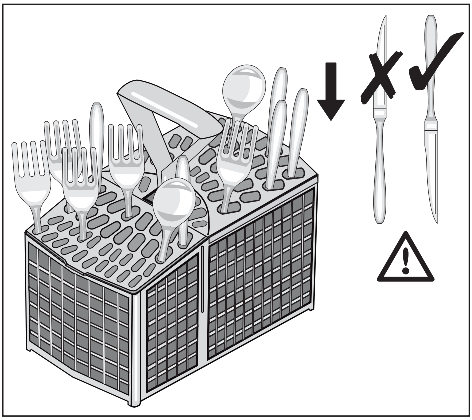

If the handles protrude from the bottom of the basket, obstructing the lower spray arm, load the cutlery with the handles facing upwards. Mix spoons with other cutlery to prevent them from sticking together.
For best results we recommend you use the cutlery grids. If the size and dimensions of the cutlery do not allow the use of the grids, they can be easily hidden or removed.

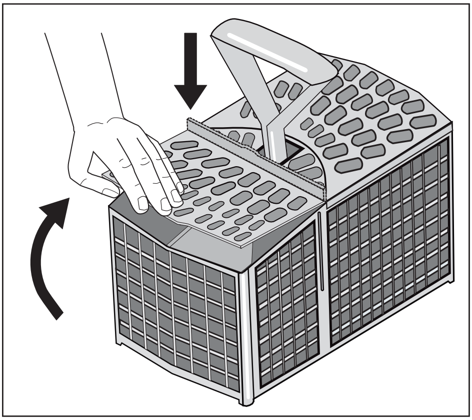

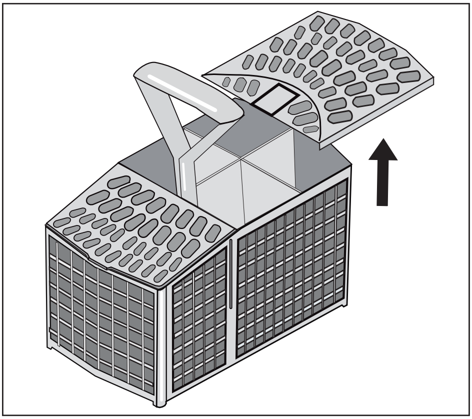

## The upper basket

The upper basket is designed for saucers, salad bowls, cups, glasses, pots and lids. Arrange items on and underneath the cup racks so that water can reach all surfaces.

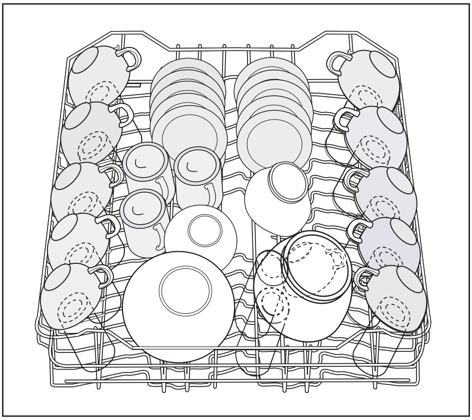

Glasses with long stems can be placed upside down in the cup racks.
For taller items, the cup racks can be folded upwards.

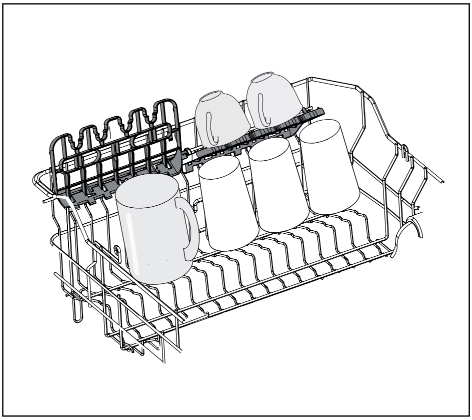

ℹ Before closing the door, ensure that the spray arms can rotate freely.

## Adjusting the height of the upper basket

If washing very large plates you can load them in the lower basket after moving the upper basket to the higher position.

| Maximum height of the dishes in the lower basket | |
|---|---|
| With upper basket raised | 31 cm |
| With upper basket lowered | 27 cm |

**To move to the higher position proceed as follows:**

1. Pull out the basket until it stops.
2. Carefully lift both sides upwards until the mechanism is engaged and the basket is stable.

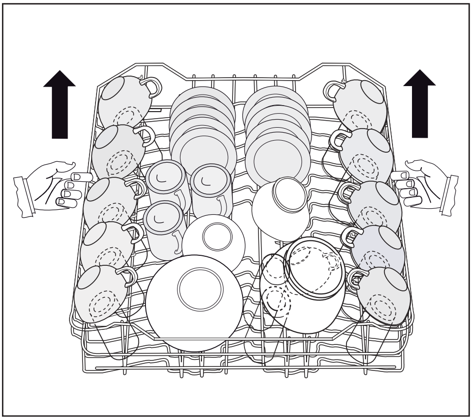

**To lower the basket to the original position proceed as follows:**

1. Pull out the basket until it stops.
2. Carefully lift both sides upwards and then allow the mechanism to drop back down slowly, keeping hold of it.

**Never lift or lower the basket on one side only.**
**When the upper basket is raised you will not be able to use the cup racks.**

**Warning!** After loading your machine always close the door, as an open door can be a hazard.

## Use of detergent

Only use detergents specifically designed for use in dishwashers. Please observe the manufacturer's dosing and storage recommendations as stated on the detergent packaging.

Using no more than the correct amount of detergent contributes to reducing pollution.

## Fill with detergent

1. Open the lid.

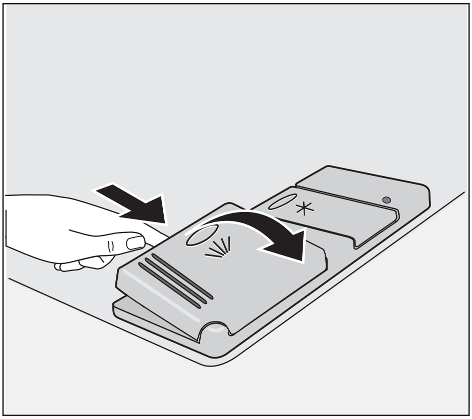

2. Fill the detergent dispenser (1) with detergent. The marking indicates the dosing levels:

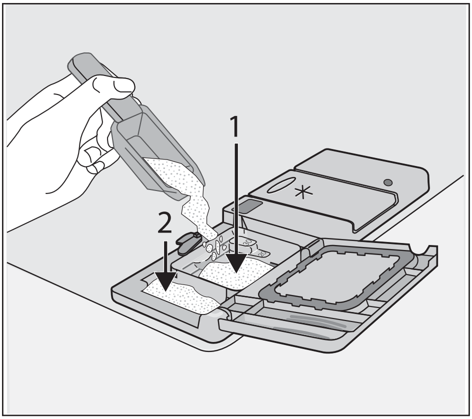


20 = approximately 20 g of detergent
30 = approximately 30 g of detergent

3. All programmes with prewash need an additional detergent dose (5/10 g) that must be placed in the prewash detergent chamber (2). This detergent will be used during the prewash phase.
   When using detergent tablets; place the tablet in compartment (1).

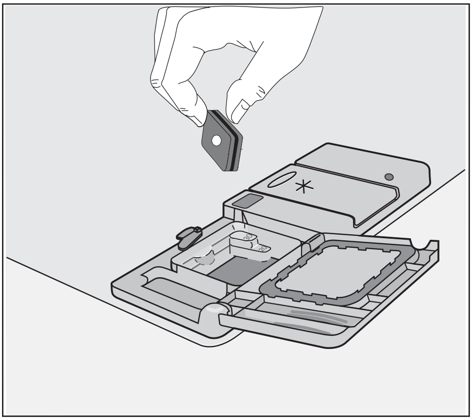

**Detergent tablets**
Detergent tablets from different manufacturers dissolve at different rates. For this reason, some detergent tablets do not attain their full cleaning power during short washing programmes. Therefore, please use long washing programmes when using detergent tablets, to ensure the complete removal of detergent residuals.

# Multi tab function

This appliance is equipped with the Multi tab function, that allows the use of combi detergent tablets.
These products are detergents with a combined cleaning, rinsing and salt functions. They can also contain other different agents depending on which kind of tablets you choose ("3 in 1", "4 in 1", "5 in 1" etc...). Check whether these detergents are suitable for your water hardness. See the manufacturers instructions.
Once this function is selected it will remain active for all following wash programmes.
With the selection of this function the inflow of rinse aid and salt from each respective supply container is automatically deactivated and also the indicator lights for salt and rinse aid are deactivated.
When using the Multi tab function, the cycle duration may change. If this is the case, the running time for the programme is automatically updated on the digital display.

Activate/deactivate the Multi tab function before the start of a washing programme.
Once the programme is running, the Multi tab function can **NO** longer be changed. If you want to cancel the Multi tab function you have to cancel the programme setting and then deactivate the Multi tab function.
In this case you have to set a washing programme (and desired options) again.

## Activation/deactivation of the Multi tab function

Simultaneously press and hold the two buttons positioned over the word Multi tab, until the Multi tab indicator light illuminates. This means that the function is active.
To deactivate the function press the same buttons again until the Multi tab indicator light turns off.

**If the drying results are not satisfactory we suggest that you:**

1. Fill up the rinse aid dispenser with rinse aid.
2. Activate the rinse aid dispenser.
3. Set the rinse aid dosage to position 2.

- The activation/deactivation of the rinse aid dispenser is only possible with the Multi tab function active.

## Activation/deactivation of the rinse aid dispenser

1. Press the On/Off button. The dishwasher must be in setting mode.
2. Simultaneously press and hold function buttons **B** and **C**, until the lights of function buttons **A**, **B** and **C** start flashing.
3. Press function button **B**, the lights of function buttons **A** and **C** go off while the light of function button **B** continues to flash. The digital display shows the current setting.

| | |
|---|---|
| 0d | rinse aid dispenser deactivated |
| 1d | rinse aid dispenser activated |

4. To change the setting, press function button **B** again, the digital display shows the new setting
5. To memorize the operation, switch off the dishwasher by pressing the On/off button.

**If you decide to revert back to the use of individual detergents we advise that you:**

1. Deactivate the Multi tab function.
2. Fill up the salt container and the rinse aid dispenser again.
3. Adjust the water hardness setting to the highest setting and perform 1 normal washing programme without loading any dishes.
4. Adjust the water hardness setting according to the hardness of the water in your area.
5. Adjust the rinse aid dosage.

# Select and start a washing programme

**Select the washing programme and delay start with the door slightly opened. The start of the programme or the countdown of the delay start will occur only after the closure of the door. Until then it is possible to modify the settings.**

1. Check that the baskets have been loaded correctly and that the spray arms are free to rotate.
2. Check that the water tap is opened.
3. Press the On/Off button. The dishwasher must be in setting mode.
4. Press the button corresponding to the required programme (see "Washing programmes" chart). Close the dishwasher door, the programme starts automatically.

## Setting and starting the programme with delay start

1. After having selected the washing programme, press the delay start button until the number of hours for the delay start appear in the digital display. The start of the selected washing programme can be delayed for between 1 and 19 hours.
2. Close the dishwasher door, the countdown starts automatically.
3. The countdown will decrease with steps of 1 hour.
4. The opening of the door will interrupt the countdown. Close the door; the countdown will continue from the point at which it was interrupted.
5. Once the delay start has elapsed the programme will start automatically.

## Cancelling a delay start or a washing programme in progress

- Simultaneously press and hold the two programme buttons positioned over the word Cancel, until all the programme button lights come on.
- Cancelling a delay start involves also the cancelling of the washing programme set. In this case you have to set the washing programme again.
- If a new washing programme is to be selected, check that there is detergent in the detergent dispenser.

**Warning! Interrupt or cancel a washing programme in progress ONLY if it's absolutely necessary. Attention! Hot steam may escape when the door is opened. Open the door carefully.**

## Interrupt a washing programme in progress

- Open the dishwasher door; the programme will stop. Close the door; the programme will start from the point at which it was interrupted.

## End of the washing programme

- The dishwasher will automatically stop and an audible signal informs you of the end of the washing programme.

1. Open the dishwasher door.
   The indicator light of the programme just ended remains illuminated.
2. Switch off the dishwasher by pressing the On/Off button.
3. Leave the dishwasher door ajar and wait a few minutes before removing the dishes; in this way they will be cooler and the drying will be improved.

**When the washing programme has finished, it is recommended that the dishwasher is unplugged and the water tap turned off.**

# Unloading the dishwasher

- Hot dishes are sensitive to knocks. The dishes should therefore be allowed to cool down before removing from the appliance.
- Empty the lower basket first and then the upper one; this will avoid water dripping from the upper basket onto the dishes in the lower one.
- Water may appear on the sides and the door of the dishwasher as the stainless steel will eventually become cooler than the dishes.

# Maintenance and cleaning

## Cleaning the filters

The filters must be checked and cleaned from time to time. Dirty filters will degrade the washing result.

**Warning! Before cleaning the filters ensure that the machine is switched off.**

1. Open the door, remove the lower basket.
2. The dishwasher filter system comprises a coarse filter **(A)**, a microfilter **(B)** and a flat filter. Unlock the filter system using the handle on the microfilter.

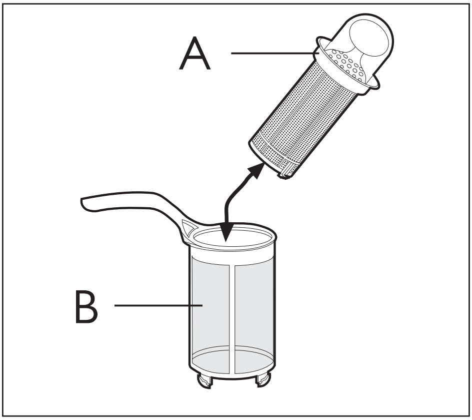


3. Turn the handle about 1/4 a turn anticlockwise and remove the filter system.

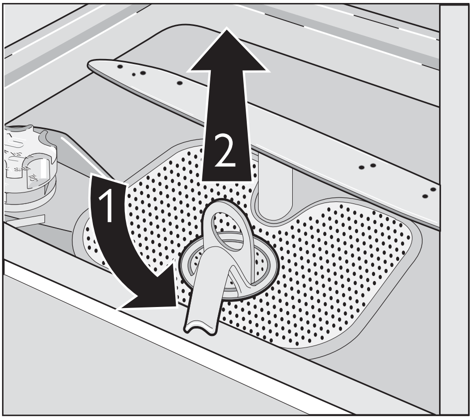


4. Take hold of the coarse filter **(A)** by the handle with the hole and remove from the microfilter **(B)**.
5. Clean all filters thoroughly under running water.
6. Remove the flat filter from the base of the washing compartment and clean both faces thoroughly.

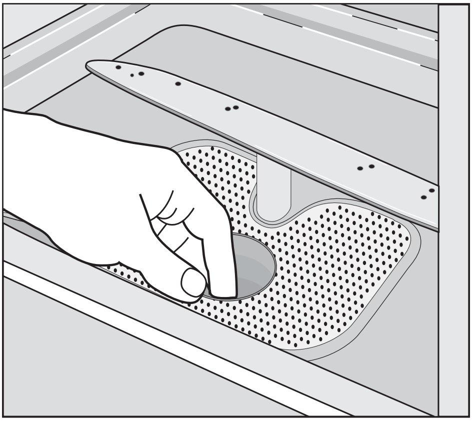

7. Put the flat filter back in the base of the washing compartment and ensure that it fits perfectly.

8. Place the coarse filter **(A)** in the microfilter **(B)** and press together.
9. Put the filter combination in place and lock by turning the handle clockwise to the stop. During this process ensure that the flat filter does not protrude above the base of the washing compartment.

**NEVER use the dishwasher without filters.**
Incorrect repositioning and fitting of the filters will produce poor washing results and will result in damage to the appliance.

**NEVER try to remove the spray arms.**
If residues of soil have clogged the holes in the spray arms, remove the debris with a cocktail stick.

## External cleaning

Clean the external surfaces of the machine and control panel with a damp soft cloth. If necessary use only neutral detergents. Never use abrasive products, scouring pads or solvent (acetone, trichloroethylene etc...).

## Internal cleaning

Ensure that the seals around the door, the detergent and rinse aid dispensers are cleaned regularly with a damp cloth.
We recommend every 3 months you run the wash programme for heavy soiled dishes using detergent but without dishes.

## Prolonged periods of non-operation

If you are not using the machine for a prolonged period of time you are advised to:

1. Unplug the appliance and then turn off the water.
2. Leave the door ajar to prevent the formation of any unpleasant smells.
3. Leave the inside of the machine clean.

## Frost precautions

Avoid placing the machine in a location where the temperature is below 0°C. If this is unavoidable, empty the machine, close the appliance door, disconnect the water inlet pipe and empty it.

## Moving the machine

If you have to move the machine (moving house, etc...):

1. Unplug it.
2. Turn the water tap off.
3. Remove the water inlet and discharge hoses.
4. Pull the machine out together with the hoses.

Avoid over tilting the machine during transportation.

# Something not working

Certain problems are due to the lack of simple maintenance or oversights, which can be solved with the help of the indications described in the chart, without calling out an engineer.

Switch off the appliance and carry out the following suggested corrective actions.

**Important!** If you call out an engineer to a fault listed below, or to repair a fault caused by incorrect use or installation, a charge will be made even if the appliance is under guarantee.

| Fault code and malfunction | Possible cause and solution |
|---|---|
| • i10 appears in the digital display<br>• Intermittent audible signal<br>**The dishwasher does not fill with water** | • The water tap is blocked or furred with limescale.<br>Clean the water tap.<br>• The water tap is turned off.<br>Turn the water tap on.<br>• The filter (where present) in the threaded hose fitting at the water inlet valve is blocked.<br>Clean the filter in the threaded hose.<br>• The water inlet hose has not been correctly laid or it is bent or squashed.<br>Check the water inlet hose connection. |
| • i20 appears in the digital display<br>• Intermittent audible signal<br>**The dishwasher will not drain** | • The sink spigot is blocked.<br>Clean out the sink spigot.<br>• The water drain hose has not been correctly laid or it is bent or squashed.<br>Check the water drain hose connection. |
| • i30 appears in the digital display<br>• Intermittent audible signal<br>**Anti-flood device is activated** | • Close the water tap and contact our extended warranty administrators, refer to Repairs-After Sales Service on the following pages. |

| Malfunction | Possible cause and solution |
|---|---|
| **The programme does not start** | • The dishwasher door has not been properly closed.<br>Close the door.<br>• The main plug is not plugged in.<br>Insert the main plug.<br>• The fuse has blown out in the household fuse box.<br>Replace the fuse.<br>• Delay start has been set.<br>If dishes are to be washed immediately, cancel the delay start. |

Once these checks have been carried out switch on the appliance.
The programme will continue from the point at which it was interrupted.

If the malfunction/fault code reappears or if other fault codes not described in the charts appear, please contact our extended warranty administrators, refer to section "Repairs - After Sales Service".

| The wash results are not satisfactory | |
|---|---|
| **The dishes are not clean** | • The wrong programme has been selected.<br>• The dishes are arranged in such a way as to stop water reaching all parts of the surface. The baskets must not be overloaded.<br>• The spray arms do not rotate freely due to incorrect arrangement of the load.<br>• The filters in the base of the washing compartment are dirty or incorrectly positioned.<br>• Too little or no detergent has been used.<br>• Where there are limescales deposits on the dishes; the salt container is empty or the incorrect level of the water softener has been set.<br>• The drain hose connection is not correct.<br>• The salt container cap is not properly closed. |
| **The dishes are wet and dull** | • Rinse aid was not used.<br>• The rinse aid dispenser is empty. |
| **There are streaks, milky spots or a bluish coating on glasses and dishes** | • Decrease rinse aid dosage. |
| **Water drops have dried onto glasses and dishes** | • Increase rinse aid dosage.<br>• The detergent may be the cause. Contact the detergent manufacturer’s consumer care line. |

# Technical data

| | | |
|---|---|---|
| Dimensions | Width<br>Height<br>Depth | 59,6 cm<br>81,8 - 89,8 cm<br>55,5 cm |
| Electrical connection - Voltage - Overall power - Fuse | Information on the electrical connection is given on the rating plate on the inner edge of the dishwasher door. | |
| Water supply pressure | Minimum<br>Maximum | 0,05 MPa (0,5 bar)<br>0,8 MPa (8 bar) |
| Capacity | | 12 place settings |

CE

# Installation

**Warning!** It is dangerous to alter the specifications or attempt to modify this product in any way.
This appliance is heavy. Care should be taken when moving it.
Care must be taken to ensure that the appliance does not stand on the electrical supply cable.
Any electrical work required to install this appliance must be carried out by a qualified electrician or competent person.
Any plumbing work required to install this appliance must be carried out by a qualified plumber or competent person.

## Unpacking

- Remove all packaging before positioning the machine.
- If possible, position the machine next to a water tap and a drain.

**Warning!** Carefully follow the instructions on the enclosed template for building in the appliance and fitting the furniture panel.

Insert the machine after adjusting the levelling with the adjustable feet. When inserting the machine, ensure that the water inlet and drain hoses are not kinked or squashed.
During all operations that involve accessibility to internal components the dishwasher has to be unplugged.
Be sure that once the appliance has been installed, it is easily accessible for the service engineer in the event that a repair is required.

## Fixing to the adjacent units

The appliance must be secured against tilting. Therefore make sure, that the counter it is fixed under, is suitably secured to a fixed structure (adjacent kitchen unit cabinets, wall).

## Levelling

Good levelling is essential for correct closure and sealing of the door. When the appliance is correctly levelled, the door will not catch on either side of the cabinet. If the door does not close correctly, loosen or tighten the adjustable feet until the machine is perfectly level.

# Water connections

## Water inlet connection

This appliance must be connected to a cold water supply.
For making the connection itself, the coupling nut fitted to the machine's inlet hose is designed to screw onto a 3/4" gas thread spout or to a purpose made quick-coupling tap such as the Press-block.
The water pressure must be within the limits given in the "Technical data". Your local Water Authority will advise you on the average mains pressure in your area.
The water inlet hose must not be kinked, crushed, or entangled when it is being connected.
The appliance features inlet and drain hoses which can be turned either to the left or the right to suit the installation by means of the locknut. **The locknut must be correctly fitted to avoid water leaks.** (Attention! NOT all models of dishwashers have inlet and drain hoses provided with a locknut.)
If the appliance is connected to new pipes or pipes which have not been used for a long time, you should run the water for a few minutes before connecting the inlet hose.
**DO NOT use connection hoses which have previously been used on an old appliance.**

This appliance has been fitted with safety features which will prevent the water used in the appliance from returning back into the drinking water system. This appliance complies with the applicable plumbing regulations.

## Water drain connection

The end of the drain hose can be connected in the following ways:

1. To the sink outlet spigot, securing it to the underside of the work surface. This will prevent waste water from the sink running into the machine.
2. To a stand pipe provided with venthole, minimum internal diameter 4 cm.

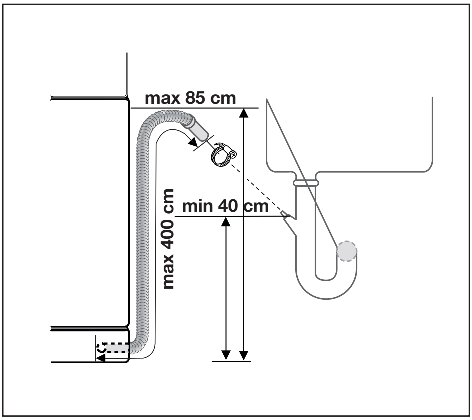


The drain hose can face either to the right or left of the dishwasher.

Ensure the drain hose is not bent or squashed as this could prevent or slow down the discharge of water.
The sink plug must not be in place when the machine is draining as this could cause the water to syphon back into the machine.
If you use a drain hose extension its internal diameter must be no smaller than the diameter of the hose provided.
Likewise the internal diameter of the couplings used for connections to the waste outlet must be no smaller than the diameter of the hose provided.

When connecting the drain hose to an under sink trap spigot, **the entire plastic membrane (A) must be removed.** Failure to remove all the membrane will result in food particles building up over time eventually blocking the dishwasher drain hose spigot.

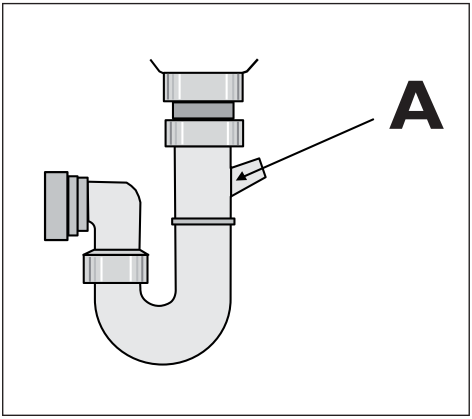


Our appliances are supplied with a security device to protect against the return of dirty water back into the machine. If the spigot of your sink has a "no return valve" incorporated this can prevent the correct draining of your dishwasher. We therefore advise you to remove it. When connecting the drain hose to an under sink trap spigot, the entire plastic membrane (A) must be removed. Failure to remove all the membrane will result in food particles building up over time eventually blocking the dishwasher drain hose spigot

# Electrical connection

**Warning!** Safety standards require the appliance to be earthed.
Prior to using the appliance for the first time, ensure that the rated voltage and type of supply on the rating plate match that of the supply where the appliance is to be installed. The fuse rating is also to be found on the rating plate.
Always plug the mains plug into a correctly installed shockproof socket.
Multi-way plugs, connectors and extension cables must not be used.
This could constitute a fire hazard through overheating.
If necessary, have the domestic wiring system socket replaced. In case that the electrical cable has to be replaced, contact your local repair agent.
The plug must be accessible after the appliance has been installed.
Never unplug the appliance by pulling on the cable. Always pull the plug.
The manufacturer accepts no liability for failure to observe the above safety precautions.

# Repairs - After sales service

If the unlikely event of your appliance requiring service, or if you wish to purchase spare parts, please contact our extended warranty administrators by telephoning:
**0870 010 7887**
They will give you details of your local Service Force Centre.

Before calling out an engineer, please ensure you have read the details under the heading "Something Not Working".
When you contact your local repair agent you will need to give the following details:

1. Your name, address and post code.
2. Your telephone number.
3. Clear and concise details of fault.

4. The purchase date (found on your receipt).
5. The model and serial number of the appliance (found on the rating plate).

So that you always have these numbers at hand, we recommend that you make a note of them here:

Mod. : . . . . . . . . . . . . . . . . . . . . . . . . . . . . . . . . . .
PNC : . . . . . . . . . . . . . . . . . . . . . . . . . . . . . . . . . .
S.No. : . . . . . . . . . . . . . . . . . . . . . . . . . . . . . . . . .

Your dishwasher is covered by a 3 year parts and labour guarantee (see separate details given at point of sale). Please retain your purchase receipt safely for the service engineer to verify the purchase details.

## Spare parts

An authorised service engineer should service this product and only genuine spare parts should be used.

Under no circumstances should you attempt to repair the machine yourself. Repairs carried out by inexperienced persons may cause injury or serious malfunctioning. Contact your local repair agent by telephoning:

**0870 010 7887**

**John Lewis Partnership**
171 Victoria Street
London SW1E 5NN
www. johnlewis.com

117963430 - 00 - 072007 - Subject to change without notice